EUROVENT
CERTIFIED PERFORMANCE

INSTRUCTIONS FOR INSTALLATION, USE AND MAINTANCE

VTP/ VTS/ VTI

CA' D'ORO fan coil heaters

TONONFORTY
the perfect climate

CE

CALOR SRL - Str. Progresului nr. 30-40, sector 5, Bucuresti - tel: 021.411.44.44, fax: 021.411.36.14
www.calorserv.ro - www.calor.ro

INDEX_TABLE

ATTENTION:
Every intervention must be done by qualified staff and following the safety norms in force. Before every intervention on the fan coils, please, read carefully this manual. The present manual must be kept for all the machine life for future information. Tonon Forty Spa declines every responsibility for any installation or for using not listed into this manual.

1.0 FEATURES OF THE HEATER

1.1 DESCRIPTION OF THE HEATER

The “CA’ D’ORO” fan coil heater is a terminal unitfor room air conditioning, ventilation, heating in the winter and cooling in the summer.

1.2 DESCRIPTION OF THE COMPONENTS

BEARING STRUCTURE: made from adequately thick galvanised steel piate, sound and heat insulated.

HEAT EXCHANGE BATTERY: made with copper tubes mechanically expanded into aluminium fins, 1/2” F bronze manifolds for water attachments with air valve (maximum working pressure 10 bar).

FAN UNIT: doublé intake centrifugai fans with 1-2-3 fan wheels, single phase three-speed eiectric motor with heat protection and condenser permanently activated.

F1LTER UNIT: made from a micro-perforated propylene panel fitted on a hearing fraine with a protection grid, fitted to the intake side, it can be easily removed for cleaning or washing.

COVER: made from moulded and painted steel piate, resistant to chemical agents and insulated with anti-condensation materia!, the delivery grid directions can be changed and the access flaps to the electric and hydraulic controls are made in heat resistant ABS. Colours are RAL 9010 series, with other colours available on request.

1.3 AVAILABLE TYPES

The following types are available:
VTP = wall fitted version
VTS = ceiling fitted version
VTI = built-in version for the wall or ceiling
Ali the fan coil heaters have a consent thermostat fitted standard (the motor turns only if the water in the exchanger has reached a temperature of 35°C).

2.0 INSTRUCTIONS FOR CORRECT INSTALLATION

2.1 PACKAGING AND TRANSPORT

Each single unit is packed in a strong cardboard box protected by polythene and polystyrol shock buffers.
The unit must be handled with care during transport and movement. No more than three units must be stored on top of each other in the vertical position and no more than five in a horizontal position. Check the packaging is not damaged and do not use any sharp or cutting instruments to open it. When the unit has been removed from the box, check that it is not damaged and corresponds to the model effectively ordered with the relative accessories. Any sort of problem should be immediately communicated to the constructor.

2.2 INSTALLING THE VARIOUS MODELS

Installation must be done by a qualified technician, before beginning check that the power supply corresponds to the requirements printed on the plaque attached to each single unit, which also gives the serial and model number. If the unit is supplied with feet, these should be fitted internally and externally and the supplementary tray if supplied (VEV - VEO). Drill the wall for the VTP and VTP/ZC models, drill the ceiling for the VTS and VTS/ZC models, following the measurements given in the “dimensions” page. Mount the fan coil heater using the expansion nogs and through screws in the slots on the edge of the unit, the screws must have a minimum diameter of 6 mm with a washer under the screw head. The same procedures are used for fixing the VTI and VTI/F models to the wall or ceiling. The air conditioning ceiling versions mounted on the ceiling must be installed with special attention paid to the inclination, to ensure the condensation water is emptied into the horizontal tray, the outlet pipe must be a 16 mm diameter flexible tube and smooth inside. If the unit is installed in the bathroom, it must be placed in a position where the switches and controls cannot be touched by anyone in the bath or shower. The power le ad must have a normal PVC sheath (designation 227 EIC 53) type N07V-K or FROR, measuring 3x1.5 mm (for versions with heating element, use a lead with the section adequate to the power intake).The heater must not be placed beneath a power socket.

WARNING!
FOR THE BUILT-IN VERSIONS, THE TEMPLATE IS PREPARED ON SITE, AND THE DIMENSIONS OF THE AIR INTAKE AND DELIVERY SECTIONS MUST BE RESPECTED AND ATTENTION MUST BE PAID THAT THERE IS NO CONTACT BETWEEN THE MOVING PARTS AND THE POWERED ELECTRIC PARTS.

For the ceiling mounted versions, it is advisable not to mount the fan-coil heater at more than 2.5-2.8 meters from the floor, to avoid air recycling during the heating phase.

VTP-VTS MODELS

Remove the cover (1), by unscrewing the two screws (2) on the bottoni edge and lift it in the direction shown by the arrows, to completely extract it from the positioning pins (3). During these operations it is advisable to replace the unit and filter in its packaging.

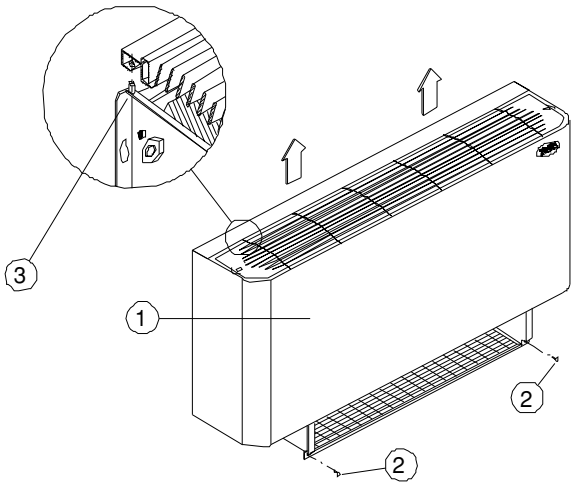

2.3 CONFIGURATIONS

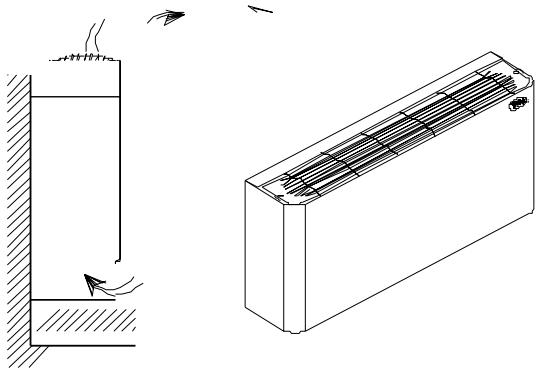

VTP
VERTICAL WALL VERSION

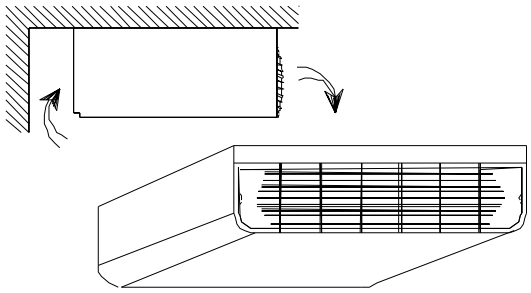

VTS
HORIZONTAL CEILING VERSION

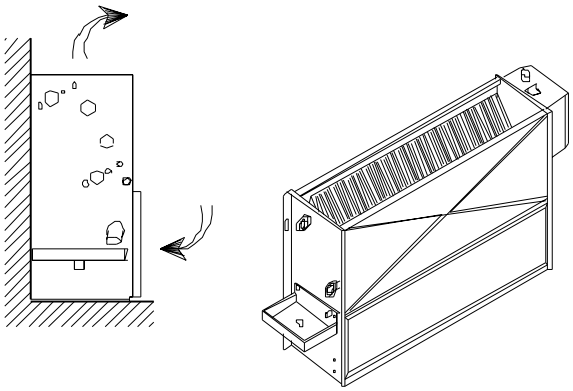

VTI
VERTICAL BUILTIN VERSION

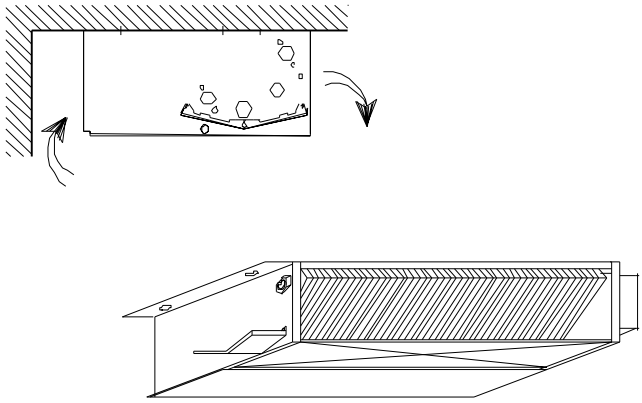

VTI
HORIZONTAL BUILTIN VERSION

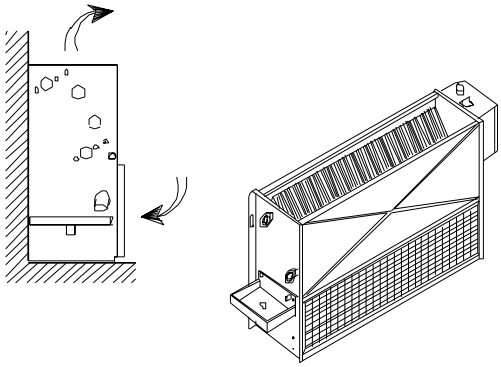

VTI/F
VERTICAL BUILT-IN VERSION WITH FRONTINTAKE

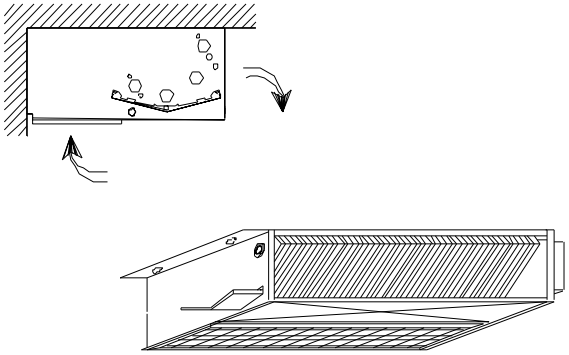

VTI/F
HORIZONTAL BUILT-IN VERSION WITH FRONTINTAKE

3.0 HYDRAULIC CONNECTIONS

Connect the heat exchanger using a 1/2” GF attachment to the water supply, using a spanner and counter-spanner to avoid damage to the battery connections. The pipes can come from the floor, wall or ceiling. To bleed any air in the circuit, use a fiat screwdriver to open the valve on the top at the side of the attachments. If the fan-coil heater is also used for air conditioning, connect the condensation outlet to the collection circuit; if the additional external tray has not been requested, the cooling water pipes must be insulated against condensation. It is advisable to make a water trap on the condensation outlet pipe to avoid intake of evil-smelling air. When the connections are terminated, check there are no water leaks from the exchanger or tray. The exchangers are supplied to work with a maximum pressure of 10 bar. The battery attachments on the tandard unit are on the left but if needed they can be moved to the tight (refer to the inverting battery attachments chapter). To instali the valves on the two or four pipe versions, follow the instruetions given in the technical manual or included in the valve kit.

- IN COOLING FUNCTION (TO AVOID WATER CONDENSING) WE SUGGEST EV2, EV4.

4.0 ELECTRIC CONNECTIONS

Turn the power of at the mains before beginning the electric connections. The connections must be made in conformity with current standards in force following the enclosed wiring diagram with each fan-coil heater. Ali the fan-coil heaters are supplied with a connection box (standard fitting on the right), which contains ali the regulation components and the grounding terminal. To reach the components, unscrew the two screws in the cover next to the lead outlets. Each fan-coil heater must be power ed with single phase 230 volts (tolerance of-51+10) 50 Hzfrequency. A bipolar motor-ci cuit switch must be installed upstream from the fan-coil heater.

THE CONNECTION BOX CONTAINS:

Standard wall mounted models with cover
VTP/VB version
- VB controls complete with summer/winter - off selection switch and 3 speed selection switch.
- Consent thermostat (for heating)
- Power terminal board

VTP/AB version
- AB control complete with summer/winter - off selection switch, 3 speed selection switch and room temperature regulation thermostat.
- Consent thermostat (for heating).
- Power terminal board

VTP/CRE version
- Onboard electronic control
- OFF, E/I and 3 fan speeds
- Automatic/manual speed modes
- Ambient temperature thermostat
- Valve control
- Fan consent sensor

Standard models without cover or ceiling mounted (VTI/VTS)

The box just contains a terminal board for connecting the motor (simple or three speed), the consent thermostat and the grounding terminal. Ali the settings for speed, temperature, etc, are done by the installer. On request TONON S.p.A., can supply the following controls which can be mounted on the wall: **CVM**: three speed regulator and summer/winter selection switch. **TAM**: electronic thermostat and summer/winter selection switch. **CEM**: three speed regulator, electronic thermostat, summer/winter selection switch and solenoid valve control **CEM/D**: electronic thermostat, three speed regulator, summer/winter heating element and solenoid valve control selection switch. **CRE:** Electronic thermostat with manual and automatic speed switch, manual and automatic summer/winter switch, valve control and electric heating element. These controls are mounted on the wall using screws and expansion nogs as described in the instruetions contained with the controls. If the heating element is installed, it must be powered separately paying special attention to the absorbed current (refer to the technical feature plaque on the heater). The heater must always be grounded.

5.0 INVERTING THE BATTERY ATTACHMENTS

A Dismantle the electric control panel.
B Disconnect the motor lead connector - **POS. 9**.
C Dismantle the consent thermostat POS. 4 pulling ìt outfrom the battery fins.
D Loosen the motor base fixing screws POS. 10, remove the battery fixing screws POS. 6; hold the battery at both ends and pulì ìt out in the direction ofthe arrow (taking care not to damage the insulation), rotate the battery by 180°, replace the attachments on the opposite side and tighten the screws **POS. 10**.
E Invert the position of the condensation outlet plug **POS. 7** and the position of the condensation tray **POS. 8**, if fitted.
F Dismantle the motor connection leadfrom the right side andfit it to the housing on the left side.
G Reassemble the electric control panel on the opposite side, connect the electric leads (follow the wiring diagram).
H Piace the consent thermostat (or probe) between the battery fins, in the opposite position from before; if the room air thermostat isfitted, position the bulb (or probe) with the special fixings **POS. 3**.

5.0 - INVERTING THE BATTERY ATTACHMENTS

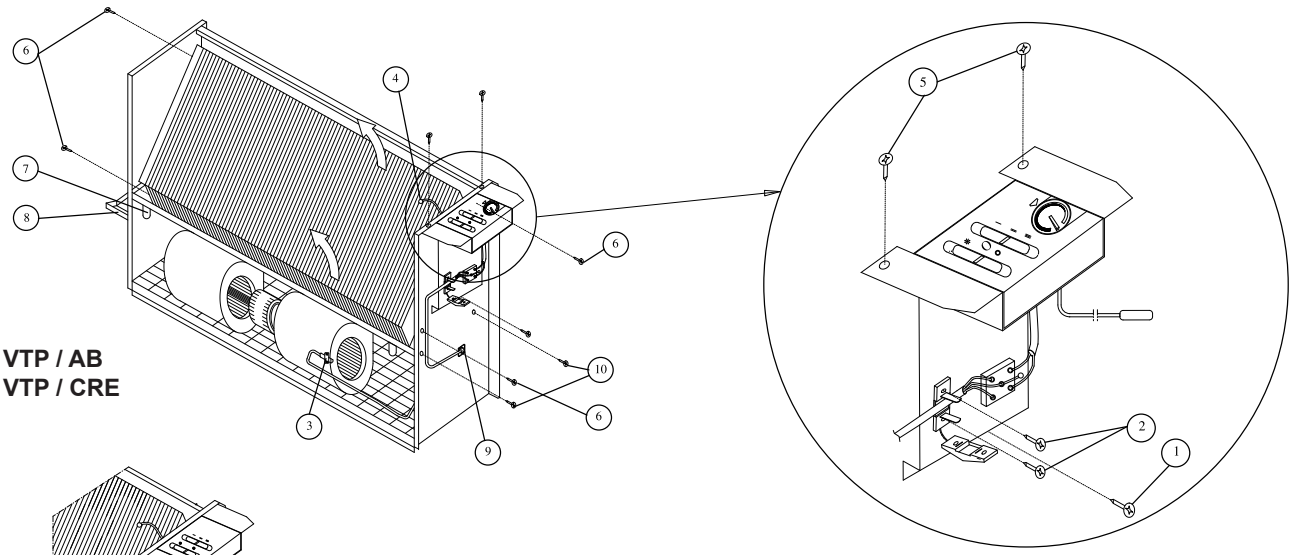

VTP / AB
VTP / CRE

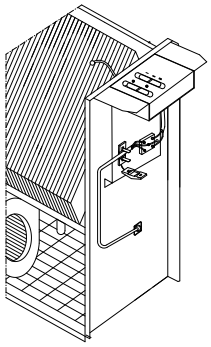

VTP / VB

DATI DIMENSIONALI, MEASUREMENTS, BESCHAFFENHEIT UND AUSSENMABE, DONNEES CONCERNANT LES DIMENSIONS, DIMENSIONES

VTS

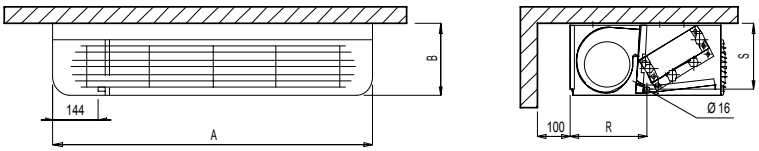

VTP

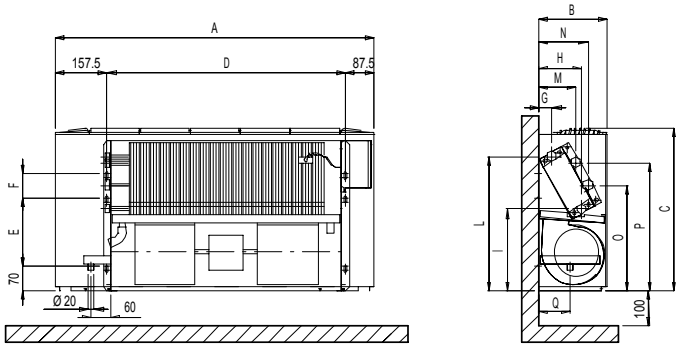

ATTACCHI 1/2”
ATTACHMENTS 1/2” F
ANSCHLUSS 1/2” F
ATTACHES 1/2” F
CONEXIONES 1/2” F

VTS/ZC

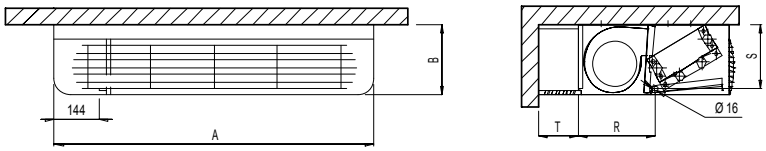

VTS/ZC

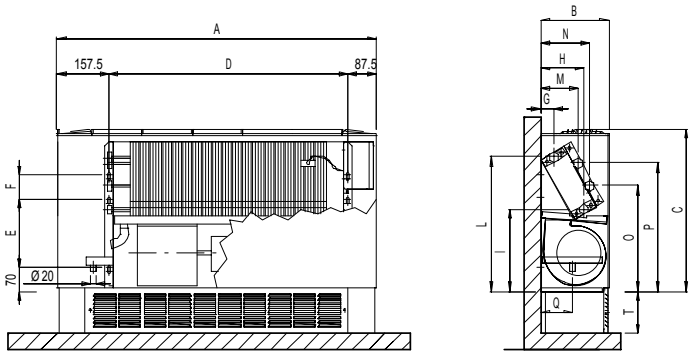

ATTACCHI 1/2”
ATTACHMENTS 1/2” F
ANSCHLUSS 1/2” F
ATTACHES 1/2” F
CONEXIONES 1/2” F

MODELLO - MODEL – MUSTER - MODÉLE - MODELO	10	20	30	40	50-60	70-80
Dimensioni d’ingombro, Overall Size, Befestigungslocher, Dimemiom d’enconibrement, Dimensiones						
A	660	810	960	1100	1410	1710
B	220	220	220	220	230	230
C	480	480	480	480	525	525
Fori di fissaggio, Fijing holes, AussenmaBe, Trous de mecordement mur, Agujeros de sujecion						
D	415	565	715	865	1165	1465
E	200	200	200	200	225	225
F	70	70	70	70	95	95
Attacchi standard, Standard attachments, Standardanschliisseanschluss, attaches standard, Conexiones estandares						
G	42	42	42	42	42	42
H	130	130	130	130	155	155
I	238	238	238	238	249	249
L	389	389	389	389	444	444
Attacchi batteria supplementare, Additional battery attachments, Zusatzbatterieabfluss, Attaches batt. suppl, Conexiones bat. sup						
M	112	112	112	112	112	112
N	149	149	149	149	174	174
O	307	307	307	307	318	318
P	372	372	372	372	427	427
Scarico condensa, Condensation outlet, Kondenswasser, Decìargement condensation, Descarga condensado						
Q	96	96	96	96	100	100
231	231	231	231	231	243	243
S	202	202	202	202	212	212
Distanza, Dist., Abst., Dist., Dist.						
	120	120	120	120	130	130

DATI DIMENSIONALI, MEASUREMENTS, BESCHAFFENHEIT UND AUSSENMABE, DONNEES CONCERNANT LES DIMENSIONS, DIMENSIONES

VTI

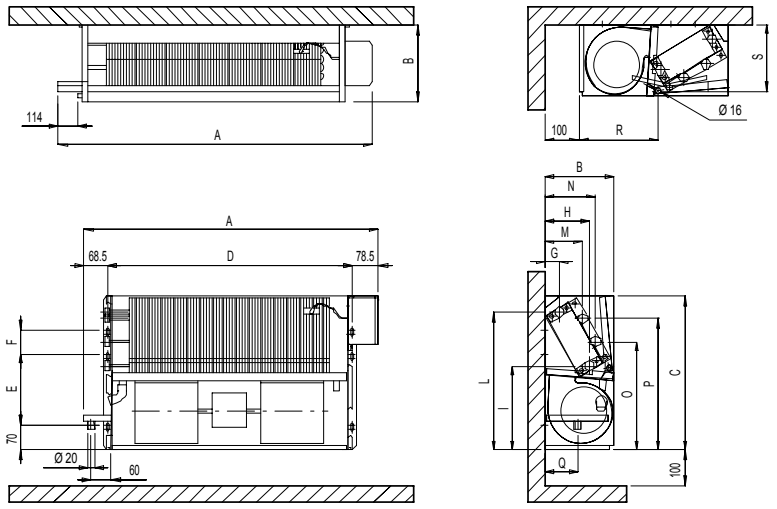

ATTACCHI 1/2”
ATTACHMENTS 1/2” F
ANSCHLUSS 1/2” F
ATTACHES 1/2” F
CONEXIONES 1/2” F

VTI/F

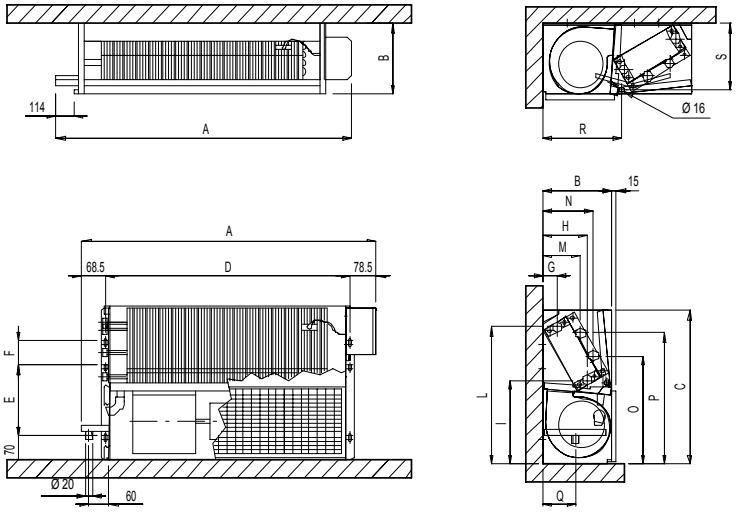

ATTACCHI 1/2”
ATTACHMENTS 1/2” F
ANSCHLUSS 1/2” F
ATTACHES 1/2” F
CONEXIONES 1/2” F

MODELLO - MODEL – MUSTER - MODÉLE - MODELO	10	20	30	40	50-60	70-80
Dimensioni d’ingombro, Overall Size, Befestigungslocher, Dimemiom d’enconibrement, Dimensiones						
A	562	712	862	1012	1312	1612
B	216	216	216	216	226	226
C	445	445	445	445	490	490
Fori di fissaggio, Fijing holes, AussenmaBe, Trous de mecordement mur, Agujeros de sujecion						
D	415	565	715	865	1165	1465
E	200	200	200	200	225	225
F	70	70	70	70	95	95
Attacchi standard, Standard attachments, Standardanschliisseanschluss, attaches standard, Conexiones estandares						
G	42	42	42	42	42	42
H	130	130	130	130	155	155
I	238	238	238	238	249	249
L	389	389	389	389	444	444
Attacchi batteria supplementare, Additional battery attachments, Zusatzbatterieabfluss, Attaches batt. suppl, Conexiones bat. sup						
M	112	112	112	112	112	112
N	149	149	149	149	174	174
O	307	307	307	307	318	318
P	372	372	372	372	427	427
Scarico condensa, Condensation outlet, Kondenswasser, Decìargement condensation, Descarga condensado						
Q	96	96	96	96	100	100
231	231	231	231	231	243	243
S	202	202	202	202	212	212

SCHEMI ELETTRICI, WIRING DIAGRAMS, SCHALTPPLANE, SCHEMAS ELECTRIQUES, ESQUEMAS ELECTRICOS

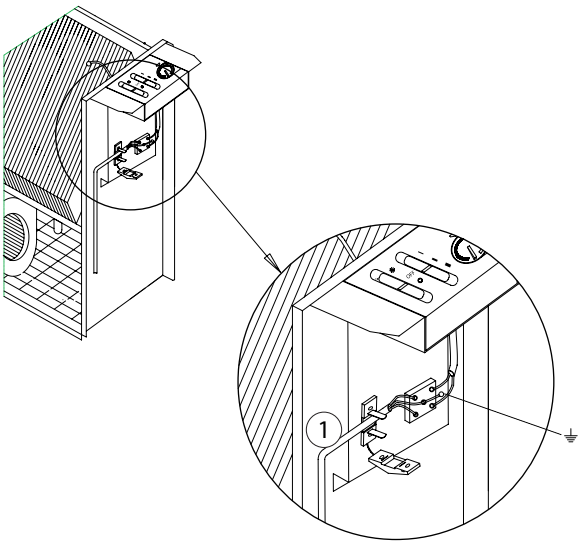

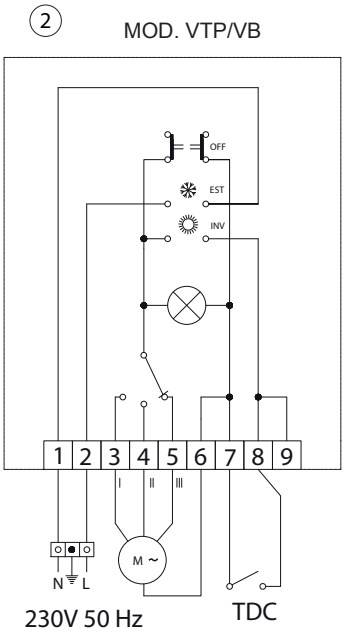

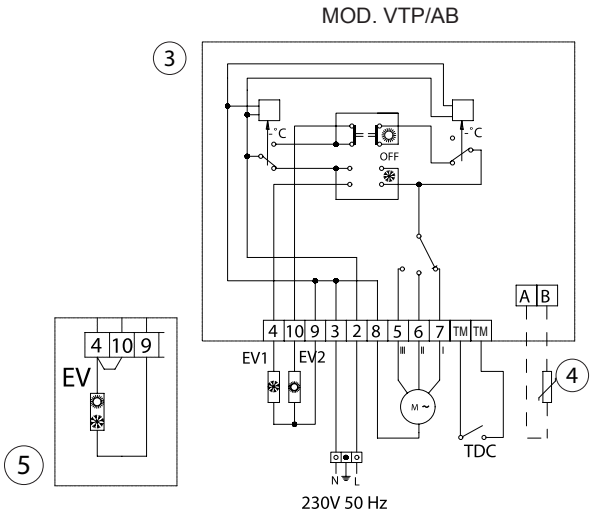

FUNZIONAMENTO IN CONDIZIONAMENTO
CONDITIONING
KÙHLEN
FONCTIONNEMENT EN CONDITIONNEMENT
FUNCIONAMIENTO EN LA FASE DE ACONDICIONAMIENTO

FUNZIONAMENTO IN RISCALDAMENTO
HEATING
HEEEN
FONCTIONNEMENT EN CHAUFFAGE
FUNCIONAMIENTO EN LA FASE DECALEFACCIÓN

Allacciamento elettrico Mod. VTP/VB - VTP/AB

1 cavo d'alimentazione (min.3x1.5 mmq)
2 SCHEMA ELETRICO VTP/VB
3 SCHEMA ELETRICO VTP/AB
4 Sonda ambiente
5 Valv. per 2 tubi
EV 1 = ELETTROVALVOLA "RAFFREDDAMENTO"
EV 2 = ELETTROVALVOLA "RISCALDAMENTO"

Electric wiring types VTP/VB-VTP/AB

1 supply lead (min. 3x1.5 mm2)
2 WIRING DIAGRAM VTP/VB
3 WIRING DIAGRAM VTP/AB
4 Roomprobe
5 Valve for 2 pipes
EVI = "COOLING" SOLENOID
EV2 = "HEATING" SOLENOID

Elektrische Anschiusse Mod. VTP/VB - VTP/AB

1 Stromkabel (min. 3 x 1.5 mm2)
2 SCHALTPLAN VTP/VB
3 SCHALTPLAN VTP/AB
4 Raumsondc
5 Vendi fiir 2 rohre
EV1=ELEKTROVENTIL "KUHLUNG"
EV2=ELEKTROVENTIL "HEIZUNG"

Branchement électrique Mod. VTP/VB-VTP/AB

1 Cable d'alimentation (min. 3 x 1.5 mm2)
2 SCHEMA ÉLECTRIQUE VTP/VB
3 SCHEMA ÉLECTRIQUE VTP/AB
4 Sonde environnement
5 Soupape pour 2 tubes
EVI = ELECTROVANNE "REFROIDISSEMENT"
EV2 = ELE CTROVANNE "CHAUFFAGE "

Conexión eléctrica Mod. VTP/VB - VTP-P/AB

1 Camble de alimentación (min.3x1.5)
2 ESQUEMA ELECTRICO VTP/VB
3 ESQUEMA ELECTRICO VTP/AB
4 Sonda ambiente
5 Valv. para 2 tubos
EV 1 = ELECTROVALVULA "REFRIGERACION"
EV 2 = ELECTROVALVULA "CALEFACCIÓN"

SCHEMI ELETTRICI, WIRING DIAGRAMS, SCHALTPPLANE, SCHEMAS ELECTRIQUES, ESQUEMAS ELECTRICOS

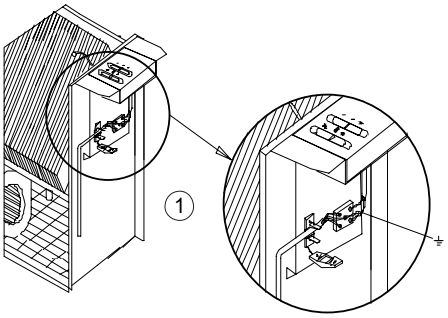

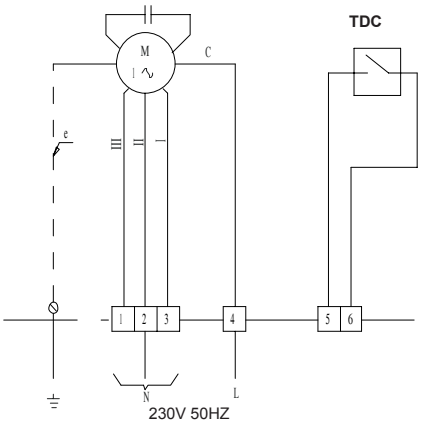

Allacciamento elettrico 230V 50Hz
1 cavo d'alimentazione (min. 3 x 1.5 mmq)
Electric wiring types 230V 50Hz
1 supply lead (min. 3 x 1.5 mm2)
Elektrische Anschliisse 230V 50Hz
1 Stromkabel (min. 3 x 1.5 mm2)
Branchement électrique 230V 50Hz
1 Cable d' alimentation (min. 3 x 1.5 mm1)
Conexión eléctrica 230V 50Hz
1 Cable de alimentación (min. 3 x 1.5 mm2)

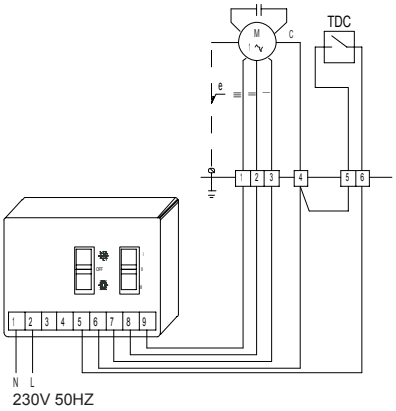

CVM + TDC
MOD VTS 10 - 80
MOD VTI 10 - 80

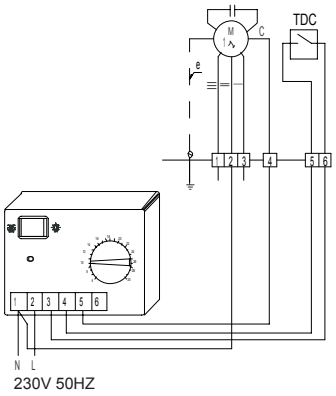

TAM + TDC
MOD VTS 10 - 80
MOD VTI 10 - 80

Collegamento effettuato alla velocità media
Wiredfor medium speed
Bei mittlerer Geschwindigkeit durchgefiihrte Verbindung
Branchement effectué à vitesse moyenne
Conexión efe tuada a la media velocidad

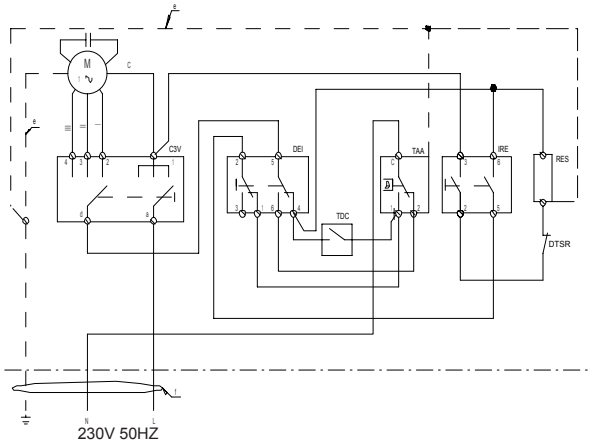

C3V + TAA + TDC + DEI + RES
MOD VTP 10-30

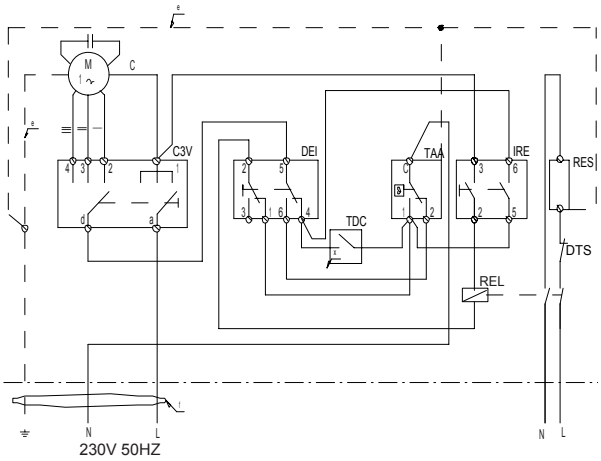

C3V + TAA + TDC + DEI + RES
MOD VTP 40-80

SCHEMI ELETTRICI, WIRING DIAGRAMS, SCHALTPPLANE, SCHEMAS ELECTRIQUES, ESQUEMAS ELECTRICOS

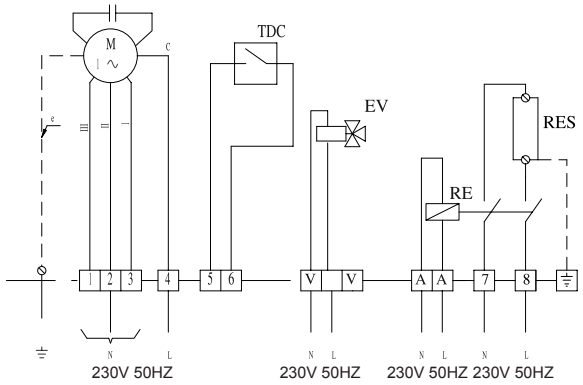

TDC + RES + EV
MOD. VTS 10 - 80
MOD. VTI 10 - 80

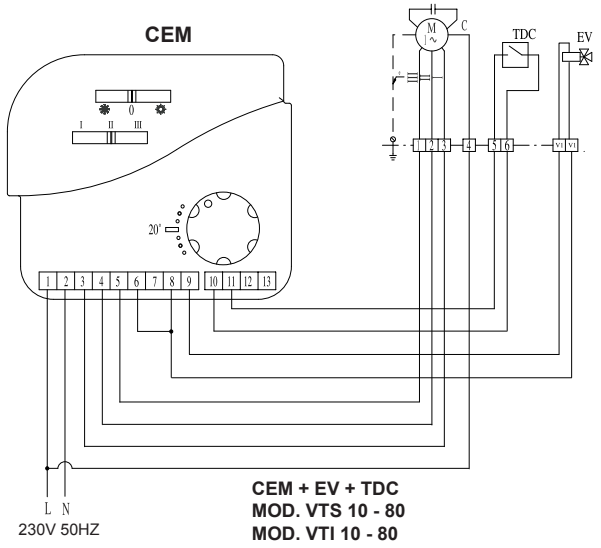

CEM + EV + TDC
MOD. VTS 10 - 80
MOD. VTI 10 - 80

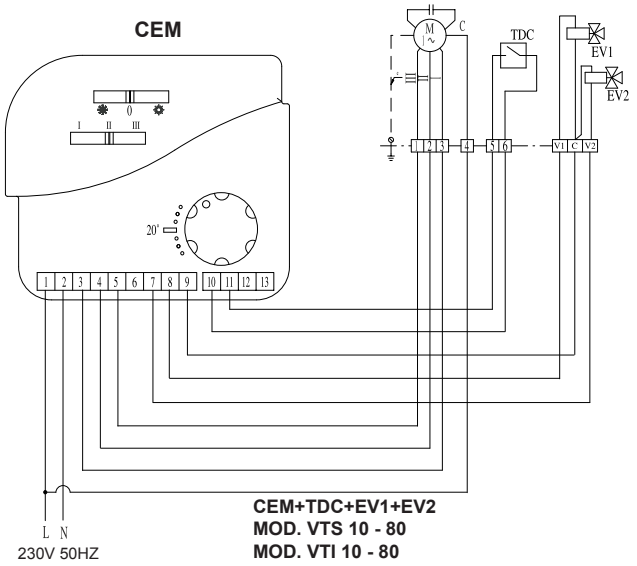

CEM+TDC+EV1+EV2
MOD. VTS 10 - 80
MOD. VTI 10 - 80

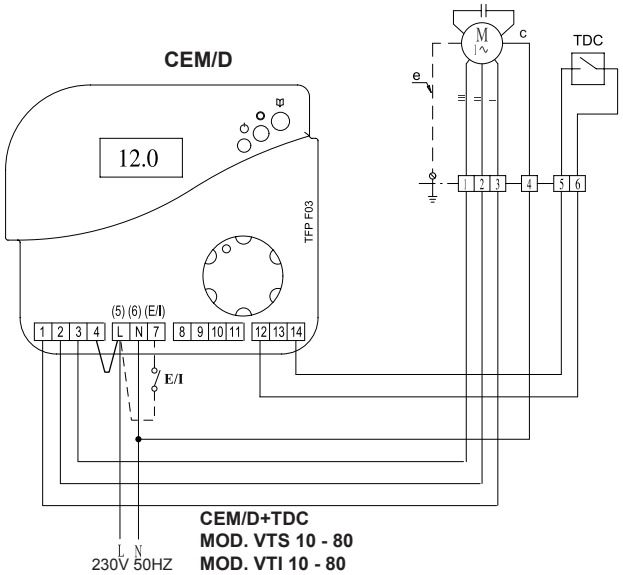

CEM/D+TDC
MOD. VTS 10 - 80
MOD. VTI 10 - 80

Parametri manuale, Parameters of the manual, Parametern des Handbuchs,
Parametres manuel, Parámetros del manual CEM/D:
P02= Selezionare, select, auswählen, sélectionner, seleccionar
P07= 2

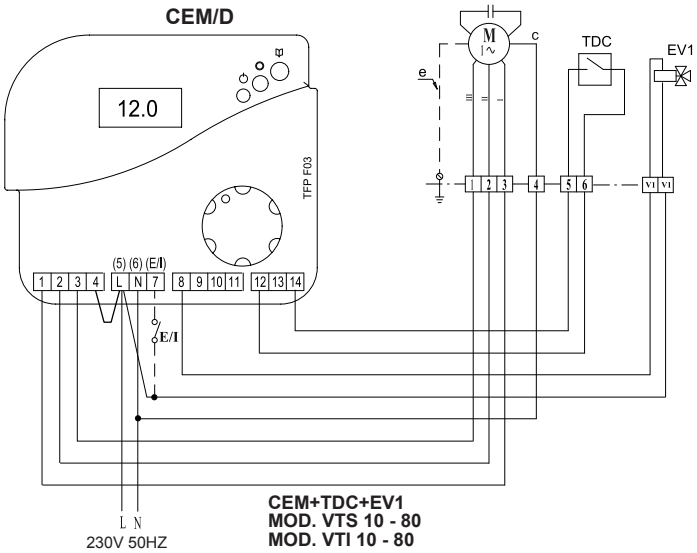

CEM+TDC+EV1
MOD. VTS 10 - 80
MOD. VTI 10 - 80

Parametri manuale, Parameters of the manual, Parametern des Handbuchs,
Parametres manuel, Parámetros del manual CEM/D:
P02= Selezionare, select, auswählen, sélectionner, seleccionar
P07= 2

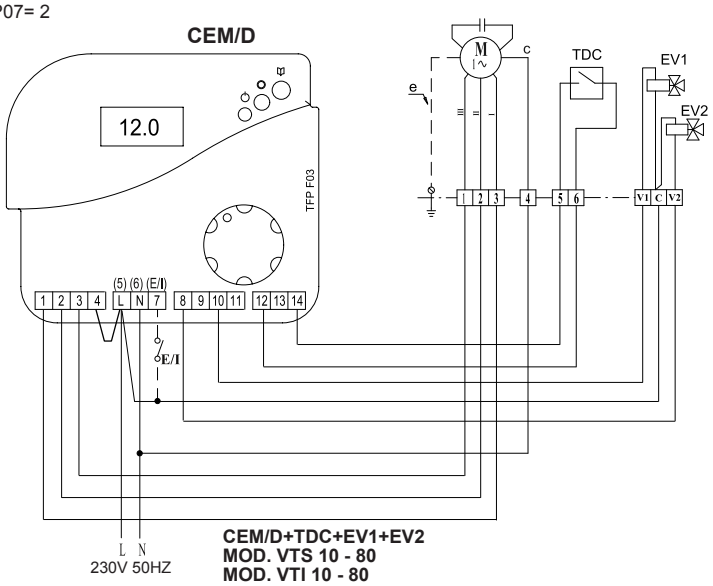

CEM/D+TDC+EV1+EV2
MOD. VTS 10 - 80
MOD. VTI 10 - 80

Parametri manuale, Parameters of the manual, Parametern des Handbuchs,
Parametres manuel, Parámetros del manual CEM/D:
PO1= 1
PO2= Selezionare, select, auswählen, sélectionner, seleccionar
PO7= 2

SCHEMI ELETTRICI, WIRING DIAGRAMS, SCHALTPPLANE, SCHEMAS ELECTRIQUES, ESQUEMAS ELECTRICOS

CDM/D

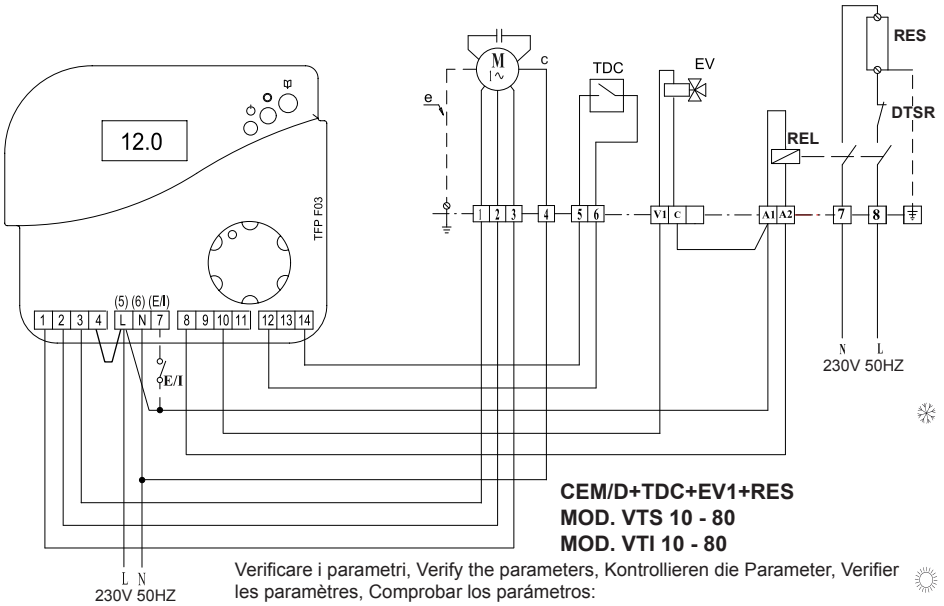

CEM/D+TDC+EV1+RES
MOD. VTS 10 - 80
MOD. VTI 10 - 80

Verificare i parametri, Verify the parameters, Kontrollieren die Parameter, Verifier les paramètres, Comprobar los parámetros:
PO1= 2
PO2= Selezionare, select, auswählen, sélectionner, seleccionar
PO7= 2
P21= 60

FUNZIONAMENTO IN CONDIZIONAMENTO
CONDITIONING
KÙHLEN
FONCTIONNEMENT
EN CONDITIONNEMENT
FUNCIONAMIENTO EN LA FASE DE ACONDICIONAMIENTO

FUNZIONAMENTO IN RISCALDAMENTO
HEATING
HEEEN
FONCTIONNEMENT
EN CHAUFFAGE
FUNCIONAMIENTO EN LA FASE DECALEFACCIÓN

CRE

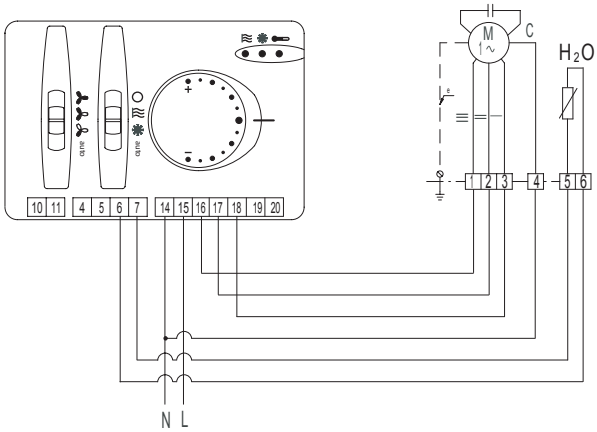

230V 50Hz

CRE + H2O
MOD. VTS/I 10-80

CRE

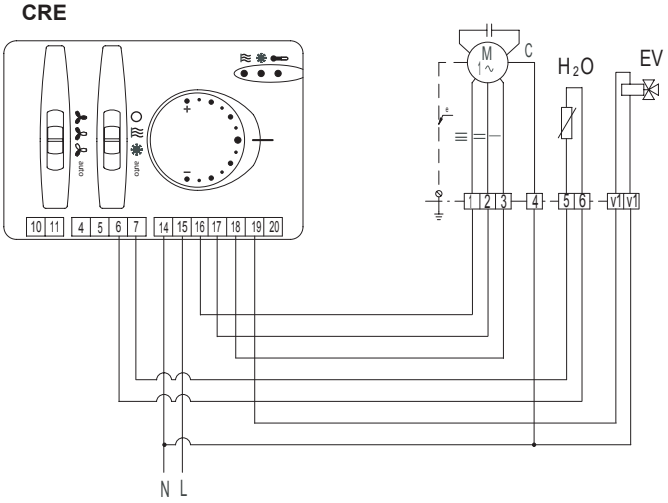

230V 50Hz

CRE+H2O+EV
MOD. VTS/I 10-80

CRE

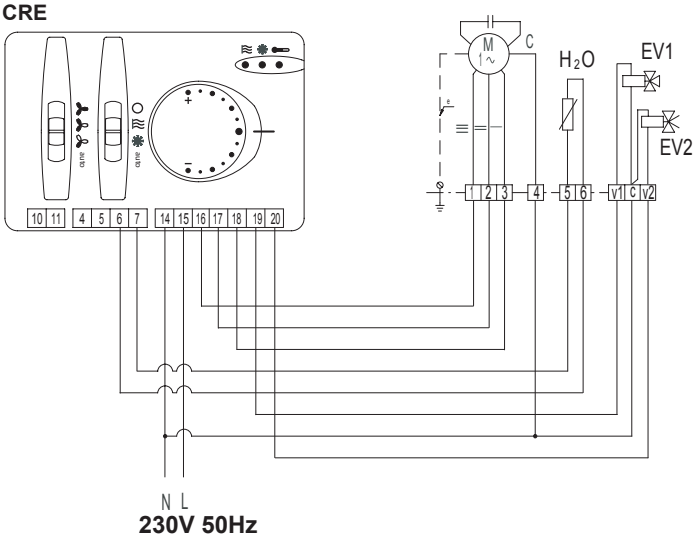

230V 50Hz

CRE+H2O+EV1+EV2
MOD. VTS/I 10-80

C3V= commutatore 3 velocità
TDC= termostato di consenso
TAA= termostato aria ambiente
DEI= deviatore estate - inverno
TAM= termostato amb. a muro
CVM= commutatore a vel. a muro
CEM= Comando remoto Estate/Inverno
- Termostato ambiente
- Commutatore tre velocità
- Comando valvole
CEM/D= Estate/Inverno commutatore manuale e automatica
- Termostato ambiente
- Comando valvole
- Commutatore tre velocità manuale e automatica
DTSR= doppio termostato di sicurezza resistenza elettrica
RES= resistenza elettrica
IRE= interruttore res. elettrica
REL= relé resistenza per mod. 40 - 80
EV1= elettrovalvola “raffreddamento”
EV2= elettrovalvola “riscaldamento”
L= linea
N= neutro
⏚= terra
e= condizionamento
c= bianco (comune motore)
I= rosso (min)
II= blu (med)
III= nero
e= giallo - verde (terra)
f= alimentazione
---= limite cablaggio interno

SOLO PER GRANDEZZE 60-80
C= bianco (comune)
I= blu (min)
II= nero (med)
III= marrone (max)

Air = sonda ambiente remota
H2O = sonda acqua
EV = Elettrovalvola raffrescamento - riscaldamento per impianto a 2 tubi
EV1= Elettrovalvola raffrescamento per impianto a 4 tubi
EV2 = Elettrovalvola riscaldamento per impianto a 4 tubi

C3V= 3 speed selection switch
TDC= coment thermostat
TAA= room air thermostat
DEI= summer-winter selection switch
TAM= wallfitted room thermostat
CVM= wallfitted 3 speed selection switch
CEM= model remote control Summer/Winter
- Room thermostat
- Three-speed switch
- Valve controls
CEM/D= Comando Res. Elettrica o manual and auto Summer/Winter switching
- Room thermostat
- Valve control
- manual and auto three-speed switch
- Heating element Controls
DTSR= doublé thermostat far heating element safety
RES= heating element
IRE= heating element switch
REL= heating element relayfar types 40-80
EVI= “cooling” solenoidi
EV2= “heating” solenoid
L= power line
N= neutra!
⏚= earth
e= cooling
e= white (common motor)
I= red (min.)
II= blue(med)
III= biade (max.)
e= yellow-green (earth)
f= power
---= limitfor internai wiringù

JUSTFOR THE 60-80 SIZES
C= white (common)
I= blue (min.)
II= black(med.)
III= brown (max.)

Air = Remote air probe
H2O = Water probe
EV = Cooling and Heating solenoid
(2 pipes system)
EV1 = cooling solenoid (4 pipes system)
EV2 = Heating solenoid (4 pipes system)

C3V= 3 Geschwindigksiten-regler
TDC= Zustimmungsthermostat
TAA= Raumluftthermostat
DEI= Umleiter Sommer- Winter
TAM= RaumthennostatWand-montiert
CVM= 3 Geschwindigkeitenregler Wandmontiert
Raumregler Mod. CEM . Sommer/Winter
- Raumthermostat
- 3-Stufen-Wahlschalter
- Ventilsteuerung.
Raumregler Mod. CEM-D. Sommer/Winter manuelle und automatische Umschaltung
- Raumthermostat
- Ventilsteuerung
- manueller und automatischer 3-Stufen-Wahlschalter
- Steuerung elektr. Widerstand.
DTSR= Doppelter Siche-rheitsthermostat elektrischer Widerstand
RES = elektrischer Widerstand
IRE = Schalter elektrischer Widerstand
REL= Widerstandsrelais far Mod. 40-80
EVI= Elektroventil “Kuhlung”
EV2= Elektroventil “Heizung”
L= Linie
N= Neutral
⏚= Erde
e= Klimatisierung
e= weiB (einfacher Motor)
I= rat (min)
II= blau (med)
FU= schwarz (max)
e= gelb-griin (Erde)
f= Stromversorgung
--- = Grenze innere Verkablung

NUR FUR DIE GROSSEN 60-80
C= weiB (einfadi)
I= blau (min)
II= schwarz (med)
III= brami (max)

Air = Raumsonde
H2O = Zustimmungssonde
EV = Electroventil “Kuhlung Heizung”
EV1= Electroventil “Kuhlung”
EV2 = Electroventil “Heizung”

C3V= commutateur 3 vitesses
TDC= thermostat de consentement
TAA= thermostat air ambiati!
DEI= déviateur été-hiver
TAM= thermostat ambiarti àfixer sur le mur
CVM= commutateur 3 vitesses àfixer sur le mur
CEM= Commandes remotés Eté / Hiver
- Thermostat d’ambiance
- Commutateur trois vitesses
- Commande soupapes
CEM/D= Été / Hiver commutation manuelle et automatique
- Thermostat d’ambiance
- Commande soupapes commutateur trois vitesses manuelle et automatique
- Commande Rés. électrque
DTSR= doublé thermostat de sécurité résistance électrique
RES= résistance électrique
IRE= interrupteur rés. électrique
REL= relais résistance pour mod. 40-80
EVI= électrovanne «refroidissement»
EVI= électrovanne «chauffage»
L= tigne
N= neutre
⏚= terre
e= conditionnement
e= blanc (moteur commuti)
I= rouge (min.)
II= bleu (moy.)
III= noir (max.)
e= ialine - vert (terre)
f= alvmentation
--- = limite càblage interne

SEULEMENTPOURLES MODELES 60-80
C= blanc (commun)
I= bleu (min.)
II= noir (moy.)
III= marron (max.)

Air = Sonde environnement
H2O = Sonde consentement
EV = Electrovanne “Refroidissement Chauffage”
EV1 = Electrovanne “Refroidissement”
EV2 = Electrovanne “Chauffage”

C3V= conmutador 3 velocidades
TDC= termostato de asenso
TAA= termostato aire ambiente
DEI= desviador verano - invierno
TAM= termostato amb. murai
CVM= conmutador 3 vel. murai mandos a distancia CEM. Estate/Inverno
- Termostato ambiente
- Conmutador de tres velocidades
- Mando valvulas
Mandos a distancia CEM-D. Verano/Invierno . conmutacion manual y automatica
- Termostato ambiente
- Mando valvulas
Conmutador de tres velocidades manual y automatica
- Mando Res. Electrica
DTSR= doble termostato de seguridad resistencia eléctrica
RES= resistencia eléctrica
IRE= interruptor res. eléctrica
REL= relè resistencia para mod. 40-80
EV1= electrovàlvula “refrigeración”
EV2= electrovàlvula “calefacción”
L= linea
N= neutro
⏚= ticrra
e= acondicionamiento
e= bianco (comùn motor)
I= rojo (min)
II= azul (med)
HI= negro (max)
e= amarillo - verde (tierra)
f= alimcntación
--- = limite cableado interior

SOLO PARA DIM. 60-80
C= bianco (comùn)
I= azul (min)
II= negro (med)
III= marron (max)

Air = Sonda ambiente
H2O = Sonda asenso
EV = Electrovalvula “Refrigeracion calefaccion”
EV1= Electrovalvula “Refrigeracion”
EV2 = Electrovalvula “Calefaccion”

INTERFACCIA DI POTENZA - POWER INTERFACE - LEISTUNGSANSCHLUSS - INTERFACE DE PUISSANCE - ESTERFAZ DE POTENCIA

Attenzione, Attention, Achtung, Attention, Atención:

Utilizzare sempre l'interfaccia di potenza per collegare più ventilconvettori ad un solo comando remoto. Always use the power interface to connect more fan coils to single remote control. Leistungsanschluss immer zu benutzen um mehre Klimakonvektoren zu ein einzigen Fernbedienung zu verbinden. Il faut utiliser toujours l'interface de puissance pour commander plusieurs (jusqu'à 4) ventilo-convecteurs avec un seule commande a distance. Utilizar siempre la interfaz de potencia para conectar varios fan coils a un solo mando a distancia.

Schema elettrico - Wiring diagram
Elcktrischcr Schaltplan - Schèma électrìque
Esquema elettrico

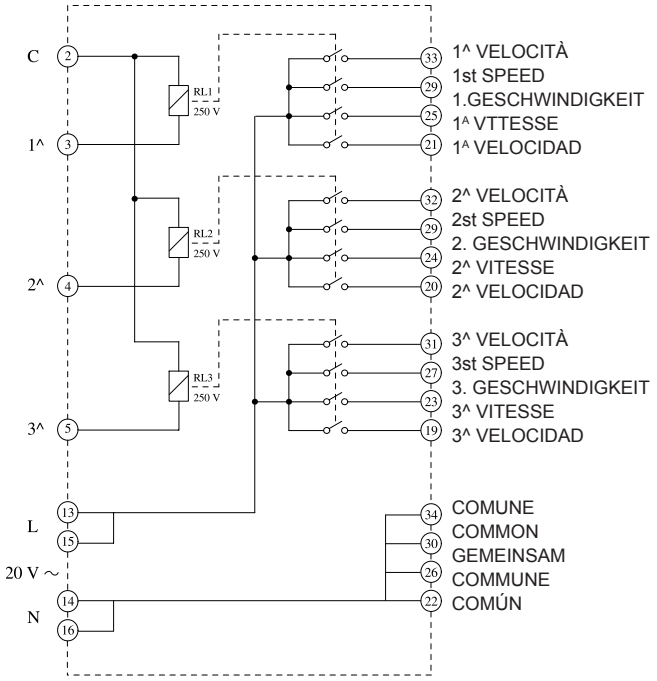

Descrizione:
- Possibilità di collegare fino a 4 Ventilconvettore con un solo comando remoto.
- Potenza max assorbita di ogni Ventilconvettore 1/10 hp

Description:
- Up to 4 fan-coils can be connecte withjusta single remote control.
- Max. Absorbed power by each fan coil is1/10 hp

bcschrcibung:
- Moglicher anschluss von bis zu 4 klimakonvektoren mit nur einer einzigen fernbedienung.
- max. Aufgenommene leistung von jedem klimakonvektoren 1/10 hp

Description:
- Possibilite de brancher jusqu'a 4 Ventilo-convecteurs avec une seule commandea distance.
- Puissance maxi absorbee de chaque Ventilo-convecteurs 1/10 hp

Descripción:
- Posibilidad de conectar hasta 4 Ventilconvectores con un ùnico mando remoto.
- Potencia max. Absorbida por cada Ventilconvectores 1/10 hp

I ventilconvettori modello VT 10-20-30-40 , sono dotati di variazione della ventilazione, mediante auto-trasformatore a 6 posizioni.
Le posizioni certificate EUROVENT sono:
VT10 - VT20 - VT30 - VT40
Morsettiera autotrasformatore (vedi fig.)
© - Min. (rosso)
© - Med. (blu)
© - Max. (nero)

The VT 10-20-30-40 version fan-coil heaters have a fan regulator using a 6 position auto-transformer.
The certified EUROVENTpositions are:
VT10 - VT20 - VT30 - VT40
Auto-transformer terminal board
(follow thè pict.)
© - Min. (red)
© - Med. (blue)
© - Max. (black)

Die Geblasekonvektormodelle VT 10-20-30-40 sind mit einer Lüftungsregelung durch Spartransformator mit 6 Stellungen ausgestattet.
Die von EUROVENT zertifizierten Positionen sind:
VT10 - VT20 - VT30 - VT40
Klemmleiste Spartransformator (siehe fig.)
© - Min. (rot)
© - Mitt. (blau)
© - Max. (schwarz)

Les ventilo-convecteurs VT 10-20-30-40 sont pourvus de variation de la ventilation, grâce à l'autotransformateur à 6 positions.
Les positions certifiées sont les suivantes:
VT10 - YT20 - VT30 - VT40
Plaque à bornes autotransformateur (voir le fig.)
© - Min. (rouge)
© - May. (bleu)
© - Maxi (noir)

Los ventilconvectores modelo VT 10-20-30-40 estan dotados de variación de la ventilación, mediante auto-transformador de 6 posiciones.
Las posiciones certificadas EUROVENT son:
VT10 - VT20 - VT30 - VT40
Tablero de bornes autotransformador (ver fig.)
© - Min. (rojo)
© - Med. (azul)
© - Max. (negro)

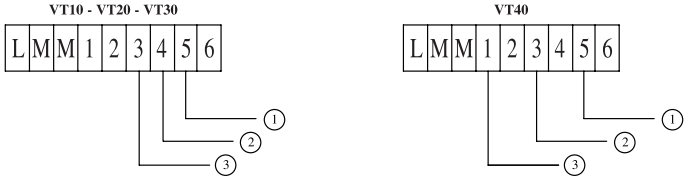

PORTATA ARIA RIFERITA ALLE VARIE POSIZIONI DEI COLLEGAMENTI ALL'AUTOTRASFORMATORE (mc/h) - AIRFLOW REFERRED TO THE VARIOUS CONNECTION POSITIONS TO THE AUTO-TRANSFORMER (mjh) - LUFTDURCHSATZ FÜR DIE VERSCHIEDENEN POSITIONEN DER ANSCHLÜSSE AN DEN SPARTRANSFORMATOR (m3/h) - DEBIT AIR SE RAPPORTANT AUX DIVERSES POSITIONS DES BRANCHEMENTSA L'AUTOTRANSFORMATEUR (mc/h) - CAUDAL DE AIRE REFERIDO A LAS VARIAS POSICIONES DE LAS CONEXIONES AL AUTOTRANSFORMADOR (m3/h)

AUTOTRASFORMATORE - AUTO-TRANSFORMER AUTO-TRANSFORMER AUTOTRANSFORMATEUR AUTOTRANSFORMADOR	Pos. 1	Pos. 2	Pos. 3	Pos. 4	Pos. 5	Pos. 6
Mod. VT 10	333	296	252③	200②	147①	128
Mod. VT 20	388	348	304③	254②	194①	184
Mod. VT 30	584	505	430③	353②	254①	232
Mod. VT 40	716③	570	490②	423	300①	283

1.0 START UP

Control that the cover andfilter are correctly assemblea and that the electric connectìons have been mode in conformity with the enclosed diagrams. Turn the heater on and check the controis to ensure the fan-coil heater and accessories work properly.
1 - Summer-winter-off selection switch.
2 - Fan regulation.
3 - Room temperature regulation
(VTP/AB versions).

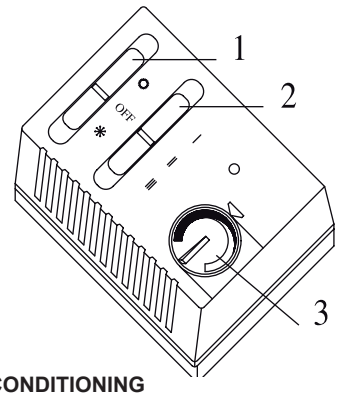

❄ **AIR CONDITIONING**

HEATING

2.0 REGULATION ACCESSORIES

Ensure that the accessories have been correctly assemblea and that the electric conectìons have been mode as given in the instructions included with the kit.

* **READ THE INSTRUCTION MANU AL CAREFULLY BEFORE MAKING ANY SETTINGS OR C A R R Y I N G O U T THE MAINTENANCE WORK.**
* **IF THE FAN-COIL HEATER IS DISSEMBLED AND REASSEMBLED THE INSTRUCTION MANU AL MUST BE SCRUPULOUSLY FOLLOWED.**
* **PAY SPECIAL ATTENTION TO HOW THE HEATER IS USED WHERE "ATTENTION" OR "DANGER" ARE WRITTEN, TO AVOID DAMAGE TO THE HEATER, PEOPLE AND PROPERTY.**
* **TONON S.P.A. DECLINES ALL RESPONSIBILITY FOR DAMAGED CAUSED BYINCORRECT USE OF THE FAN-COIL HEATER AND BY FAILURE TO FOLLOW THE INSTRUCTIONS GIVEN IN THIS MANUAL.**

3.0 USING THE FAN-COIL HEATER

Ensure that the air-intake zone isfree and there is nothing covering the delivery grid (do not use it to dry washing, or piace anything on top ofit) otherwise the heater will not work correctly.

4.0 MAINTENANCE

Correct periodic maintenance means safe top quality performance. Before beginning any sort of maintenance:
- Turn the power offto the fan-coil heater
- Ensure that the solenoid or holder do not allow water to circuiate in the exchanger.
- Use protective gloves

Once a month or after heavy use, clean the filter using a vacuum cleaner or wash it with neutral detergent. If the filter is stili not clean request a new one from our service centre. How to remove the filter (see the figure):
- Unscrew the fixing screws.
- Pulì the filter downwards towards the floor (or the wall in horizontal versions).

Once a year or after a long time without being used, clean the battery with a compressed airjet and check that the condensation outlets are not blocked.
Do notpour water onto the heater. The electric motor does not require maintenance.
If the heater is not used and the outside temperature falls below 0°C, empty the exchanger by opening the screws below the bottom attachment and add mono ethylene glycol to the water to lower the freezing temperature to the required level.

5.0 FAULT FINDING

FAULT	CAUSE	REMEDY
No air comes out	The motor does not turn The consent thermostat does not dose	Check the power supply Increase the intake water temperature
Little air comes out	Blocked filter or battery Airflow blocked	Clean the filter and battery Unblock the airflow
Poor heating/cooling	Air in the hydraulic circuit Little water in the circuit Intake water temperature low/high	Bleed the hydraulic circuit Check the boiler or cooler Check the boiler or cooler

* FOR ANY PROBLEMS THAT ARE NOTCOVERED BY THE INSTRUCTION MANUAL, CONTACT THE TONON S.P.A. SERVICE CENTRE.

ATTENTION
In case offire water must not be used - only powder or COi extinguishers.

SPARE PARTS
Use only originai spare parts.

WARRANTY
The warranty is valid for 3 years (except the electric parts which are coveredfor 1 year). The warranty is valid from the date the heater is installed. The warranty is no longer valid if repairs or alterations are mode by unauthorised persons, or due to faults that are not caused by originai faults of the components or its construction.

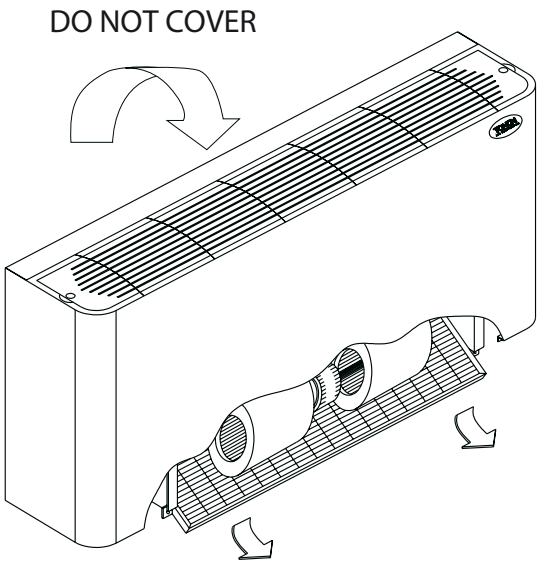

CUSTOMER

CARATTERISTICHE TECNICHE VENTILCOVETTORE CA' D'ORO - TECHNICAL FEATURES OF CA' D'ORO FAN COIL HEATES - TECHNISCHE EIGENSCHAFTEN KLIMAKONVEKTOR CA' D'ORO - CARACTERISTIQUES TECHNIQUES VENTILO-CONVECTEUR CA' D'ORO - DATOS TECNICOS VENTILCONVECTOR CA' D'ORO

Modello - Type - Modell - Modéle - Modelo		**10**	**20**	**30**	**40**	**50**	**60**	**70**	**80**
Potenza termica - Heating capacity - Heizleistung - Puissance termique - Potencia calorica **(1) E** Acqua ingresso 70°C, ΔT 10K - Intake water temperature 70°C, ΔT 10K - Temp. Wasservorlauf 70°C, ΔT 10K - Temp. entrée eau 70°C, ΔT 10K - Temp. entrada agua 70°C, ΔT 10K	**W max**	2910	3770	5250	8870	12100	14300	17100	19200
	W med	2430	3260	4490	6540	9870	12100	15300	17100
	W min	1900	2640	3460	4330	8190	9870	13000	15300
Portata acqua max - Water flow - Wassermenge - Debit d'eau - Caudal agua	**l/h**	254	329	459	776	1056	1246	1498	1677
Perdite di carico acqua - Pressuredrop - Druckverlust - Perte de charge - Perdita de carga	**Kpa**	3.08	6.92	4.34	13.1	6.9	7.08	12.2	14.9
Potenza termica - Heating capacity - Heizleistung - Puissance termique - Potencia calorifica **(2) E** Acqua ingresso 50°C - Intake water temperature 50°C - Temp. Wasservorlauf 50°C - Temp. entrée eau 50°CK - Temp. entrada agua 50°C	**W max**	1690	2030	2930	5240	6590	7500	9860	10700
	W med	1420	1770	2530	3880	5430	5880	8800	9580
	W min	1120	1470	1960	2600	4480	4840	7770	8550
Perdite di carico acqua - Pressuredrop - Druckverlust - Perte de charge - Perdita de carga	**Kpa**	2.47	5.04	4.59	12.3	6.02	8.9	15.4	19.4
Potenza termica IR - Heating capacity - Heizleistung - Puissance termique - Petencia calorifica **(4) E** Batteria di scambio aggiuntiva an un rango - Additional one rank exchange battery - Leiter ZusatzAustascherBatterie d'échange addìtionelle à un rang-1 - Battería de intercambio adjunta de un rango Acqua ingresso 70°C, ΔT 10K - Intake water temperature 70°C, ΔT 10K - Temp. Wasservorlauf 70°C, ΔT 10K Temp. entrée eau 70°C, ΔT 10K - Temp. entrada agua 70°C, ΔT 10K	**W max**	1420	1910	2700	4080	5580	6070	7440	8150
	W med	1210	1680	2350	3210	4570	5580	6920	7440
	W min	980	1390	1600	2260	3890	4570	6050	6920
Portata acqua max - Water flow - Wassermenge - Debit d'eau - Caudal agua	**l/h**	124	167	236	357	476	530	651	713
Perdite di carico acqua - Pressuredrop - Druckverlust - Perte de charge - Perdita de carga **E**	**Kpa**	3.00	6.07	12.3	27.8	21	23.3	42.1	46.7
Potenza frigorifera totale - Total cooling capacity - Kühlleistung Total **(3) E** Puissance frigorifique totale - Potencia frigorifica total	**W max**	1110	1560	2200	4210	4690	5790	7940	8500
	W med	960	1380	1880	3240	3570	4030	7210	7710
	W min	780	1130	1470	2250	2910	3030	6650	7000
Potenza frigorifera sensibile - Sensible cooling capacity - Kühlleistung Sensibel **(3) E** Puissance frigorifique sensible - Potencia frigorifica sensible	**W max**	960	1120	1820	3040	3870	4860	5950	6620
	W med	810	1070	1520	2270	3080	3870	5340	5950
	W min	640	860	1160	1520	2390	3080	4570	5340
Portata acqua max - Water flow - Wassermenge - Debit d'eau - Caudal agua	**l/h**	191	268	378	723	797	996	1365	1440
Perdite di carico acqua - Pressuredrop - Druckverlust - Perte de charge - Perdita de carga **E**	**Kpa**	1.59	5.93	5.41	14.7	9.60	10.3	17.9	21.5
Portata aria - Air flow - Luftmenge - Debit d'air - Caudal aire	**mc/h max**	252	304	430	716	920	1130	1320	1520
	mc/h med	200	254	353	490	720	920	1150	1320
	mc/h min	147	194	254	300	573	720	946	1150
Pressione sonora - Sound pressure level - Geräuschpegel - Pression sonore - Nivel sonoro	**dB (A) max**	38.5	38.5	41.5	45.5	48.5	54.5	52.5	57.5
	dB (A) med	34.5	34.5	35.5	37.5	40.5	48.5	48.5	53.5
	dB (A) min	28.5	27.5	27.85	26.5	34.5	41.5	43.5	49.5
Potenza sonora - Sound output - Schalleistung - Puissance sonore - Potencia sonora **E**	**dB (A) max**	47	47	50	56	57	63	61	66
	dB (A) med	43	43	45	46	49	57	57	62
	dB (A) min	37	36	36	35	43	50	52	58
Alimentazione elettrica - Power supply - Stromversorgung - Alimentation életrique - Alimentacion elèctrica		**230V/1/50 Hz**							
Potenza max ventilatore - Max fan capacity - Max Ventilatorleistung **E** Puissance maximale ventilateur - Potencia max ventilador	**W**	49	32	65	90	108	143	172	217
Corrente max assorbita - Max absorbed current - Max aufgenommener Storm - Puissance maximum absorbée - Corriente max absorbida	**A**	0.21	0.14	0.28	0.39	0.47	00.63	0.75	0.94
Resistenza elettrica (a richiesta) - Heating element (on request) - Elektrischer Winderstand (auf Anfrage) - Rèsistance électrique (en option) - Resistencia elèctrica (bajo pedido)	**W**	750	1000	1500	2000	2500	2500	3000	3000
Contenuto acqua batteria 3R (di serire) - 3 row water content - Wasserinhalt Austauscher 3R (serie) - Contenance en eau batterie 3R - Contenido de agua de la batería 3R	**1**	0.6	0.9	1.3	1.9	2.8	2.8	3.6	3.6
Contenuto acqua batteria IR (supplementare) - I row water - Wasserinhalt Austauscher IR (optionelle) - Contenance en eau batterie IR - Contenido de agua de la baterfa IR	**1**	0.2	0.3	0.4	0.5	0.9	0.9	1.2	1.2
Peso - Weight - Gewicht - Poids - Peso	**Kg**	14	17	20	23	35	35	47	47

"E": Prestazioni certificate EUROVENT
(1) - Riscaldamento: Temperatura ambiente 20°C - Temperatura ingresso acqua 70°C - ΔT acqua 10°C
(2) - Riscaldamento **"E":** Temperatura ambiente 20°C - Temperatura ingresso acqua 50°C - Portata acqua come in raffreddamento alla vel. Max.
(3) - Raffreddamento: Temperatura aria esterna 27°C b.s. - 19°C b.u. Temperatura acqua ingresso 7°C - Uscita 12°C
(4) - Valori riferiti alla batteria aggiuntiva "IR" per impianti a "4 Tubi", tutti gli altri valori sono riferiti alla versione base con batteria "3R" per impianti a "2 Tubi"

"E": EUROVENT Performance certificate
(1) - Heating: room temperature 20°C, untake water temperature 70°C. ΔT water 10°C
(2) - Heating (E): room temp. 20°C, intake water temp. 50°C, water flow the same as cooling, all max. speed.
(3) - Cooling: room temp. 27°C dry bulb. 19°C damp bulb. water Temp. intake 7°C - outlet 12°C.
(4) - The values refer to the extra "IR" battery for the "4 tube" systems, all the other values refer to the basic version whit the "3R" battery for "2 tube" systems.

"E": zertifizierte Leistungen EUROVENT
(1) - Heizung: Raumtemp.20°C - Temp. Wasservorlauf 70°C - ΔT Wasser 10°C
(2) - Heizung "E": Raumtemp. 20°C - Temp. Wasservorlauf 50°C - Wasserdchfluss wie beim Kühlen auf max. 2 Geschw.
(3) - Kühlung: Temp. Raumluft 27°C mit feuchter Thermometerkugel, 19°C mit troknen Thermometerkugel, Wassertemp. Vorlauf 7°C - Ablauf 12°C
(4) - Die Werte beziehen sich auf den Zusatzaustauscher "IR" für "4-Leiter-Systeme", alle anderen Werte beziehen sich auf die basisversion mit Austauscher "3R" für "2-Leiter-Systeme"

"E": Prestations certifées EUROVENT
(1) - Réchauffement: temp. ambiante 20°C, temp. entrée eau 70°C. ΔT eau 10°C
(2) - Réchauffement (E): temp. ambiante 20°C , temp. entrée eau 50°C, débit eau comme dans la phase de refroidissement vitesse max.
(3) - Refroidissement: temp. air ambiant 27°C bulbe sec. 19°C bulbe humide, temp. eau entrée 7°C - sortie 12°C
(4) - Valeurs référées à la batteriesupplémentaire "IR" pour installations à "4 TUBES", toules les autres valeurs se rèfèrent à la version base batterie "3R" pour installation à "2 TUBES".

"E": Rendimientos certificados EUROVENT
(1) - Calefacción: Temp: ambiente 20°C - Temp. entrada agua 70°C - ΔT agua 10°C
(2) - Calefacción "E": Temp: ambiente 20°C - Temp. entrada agua 50°C - Caudal agua corno eln refrigeración la vel. max
(3) - Refrigeración: Temp. aire ambiente 27°C b.s. - 19°C b.h., Temp. agua entrada 7°C - salida 12°C
(4) - Valores referidos a la baterfa adicional "IR" para installaciones a "4 TUBOS", todos los otros valores se referien a la version base con baterfa "3R" para installaciones a "2 TUBOS"

UNITA BASE - BASIC UNIT - BASISEINHEIT - UNITE BASE - UNIDAD BASE

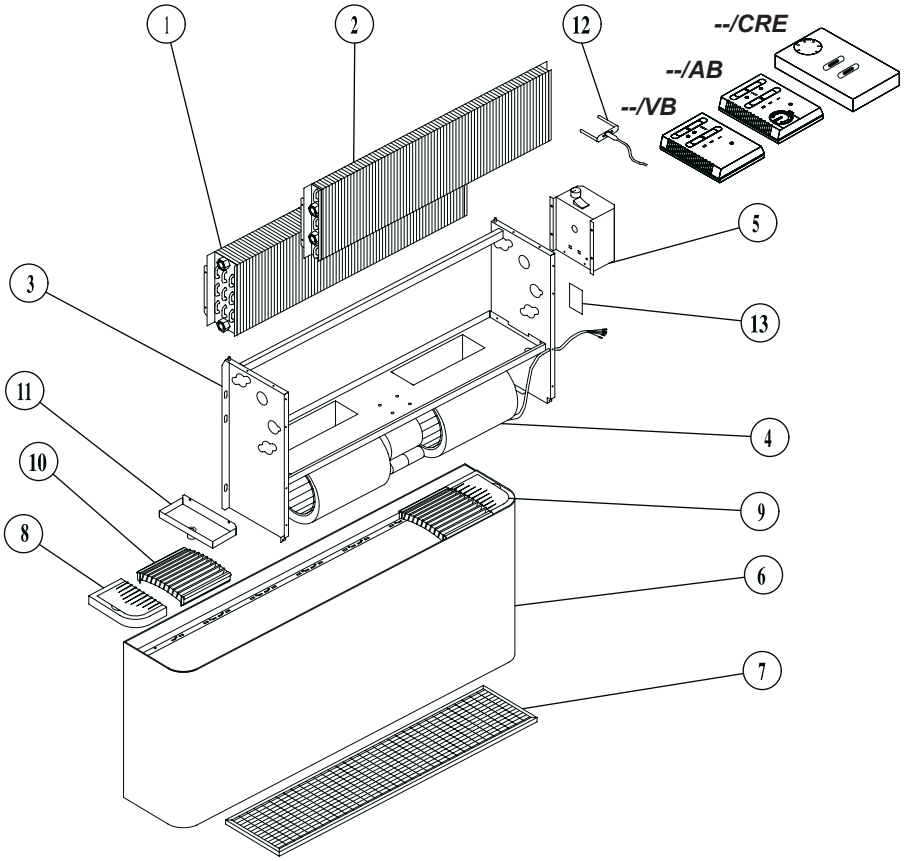

COMPONENTI PRINCIPAL

1 Batteria di scambio
2 Batteria supplementare IR (a richiesta)
3 Struttura portante
4 Gruppo ventilante
5 Pannello comandi
6 Mobile di copertura
7 Sezione filtrante
8 Sportello sx
9 Sportello dx
10 Griglia diffusore
11 Vaschetta esterna (a richiesta)
12 Termostato di consenso
13 Targhetta caratteristiche

MAIN COMPONENTS

1 Exchange battery
2 Single rara, additional battery (on request)
3 Bearìng structure
4 Fan unii
5 Control panel
6 Cover
7 Filterunit
8 Uhflap
9 R/hflap
10 Diffuser grid
11 Outside tray (on request)
12 Consent thermostat
13 Technical feature plaque

HAUPTBESTANDTEILE

1 Warmeaustauscher
2 Zusatzaustauscher IR (auf Anfrage)
3 Tragende Struktur
4 Geblase
5 Bedienblende
6 Abdeckgehause
7 Filter
8 Klappe links
9 Klappe rechts
10 Verteilergitter
11 ÀuBere Wanne (auf Anfrage)
12 Freigabe-Thermostat
13 Typenschild

COMPOSANTES PRINCIPALES

1 Batterie d'échange
2 Batterie supplémentaire R (en option)
3 tructure portante
4 Groupe de ventilation
5 Panneau de commande
6 Meublé de couverture
7 Groupe defilltration
8 Porte gche
9 Porte dte
10 Grille diffuseur
11 Cuve externe (en option)
12 Thermostat de consentement
13 Plaquette caractéristiques

COMPONENTES PRINCIPALES

1 Bateria de intercambio
2 Bateria suplementaria IR (a petición)
3 Estructura portante
4 Grupo ventilador
5 Panel de mandos
6 Mueble de copertura
7 Sección filtrante
8 Puerta izquierda
9 Puerta derecha
10 Rejilla de difusión
11 Bandeja externa (a petición)
12 Termostato de asenso
13 Placa de caracteristicas